ACCESSORY ORIENTATION CHART

ITEM	SERVICE	SIZE	REF DEGREE	RADIUS	ELEVATION FROM TOP OF BOTTOM SEGMENT TO CTR OF ACCESSORY UNLESS NOTED OTHERWISE

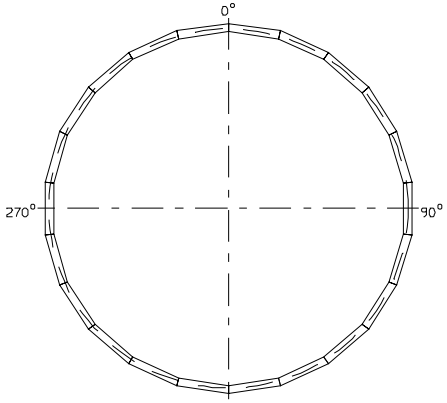

TOP VIEW

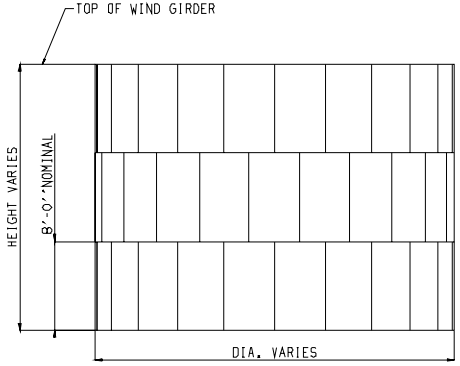

ELEVATION

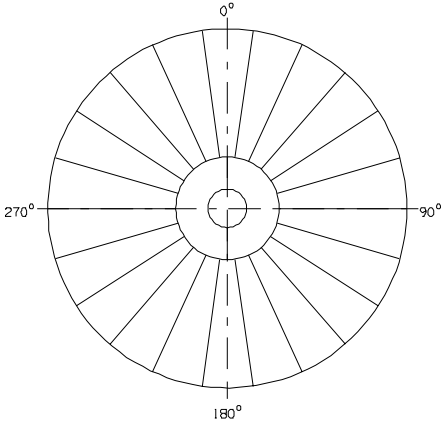

BOTTOM PLAN

CONFIDENTIAL

THIS DRAWING IS THE PROPRIETARY PROPERTY OF COLUMBIAN TECTANK. AND SHALL NOT BE USED NOR REPRODUCED WITHOUT THE EXPRESS WRITTEN CONSENT OF THE CORPORATION.

REV.		BY	CHK.	APP.	DATE
D					
C					
B					
A					

SCALE NTS

DRN.

CHK.

APP.

COLUMBIAN TecTank

TYP. LEACHATE TANK OPEN TOP W/BOTTOM

REL. NO. A